〔TECHNICAL DATA〕

SOCKET HEAD CAP SCREWS

Excerpt from JIS B 1176 (1988)

1. Shapes and dimensions

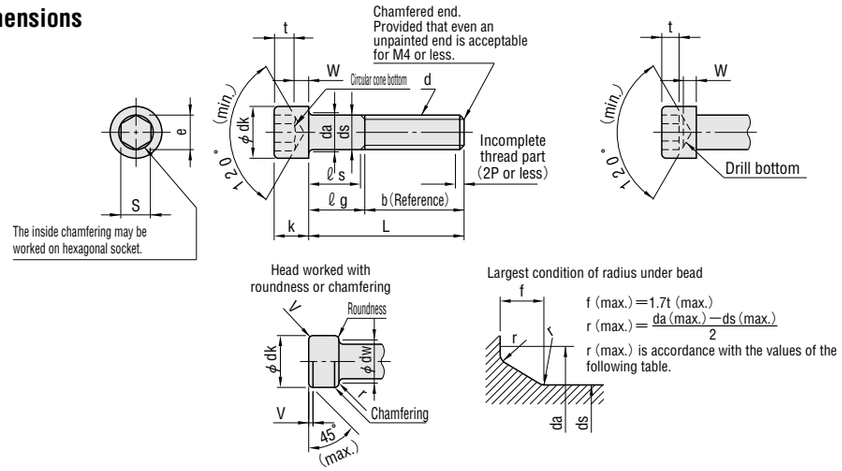

Unit：mm

Nominal diameter of thread (d) (15)		M3	M4	M5	M6	M8	M10	M12	(M14)	M16	(M18)	M20	(M22)	M24	(M27)	M30
Pitch of screw thread (P)		0.5	0.7	0.8	1	1.25	1.5	1.75	2	2	2.5	2.5	2.5	3	3	3.5
b	Reference	18	20	22	24	28	32	36	40	44	48	52	56	60	66	72
d_k	Max. (Basic size)*	5.5	7	8.5	10	13	16	18	21	24	27	30	33	36	40	45
	Max.**	5.68	7.22	8.72	10.22	13.27	16.27	18.27	21.33	24.33	27.33	30.33	33.39	36.39	40.39	45.39
	Min.	5.32	6.78	8.28	9.78	12.73	15.73	17.73	20.67	23.67	26.67	29.67	32.61	35.61	39.61	44.61
d_a	Max.	3.6	4.7	5.7	6.8	9.2	11.2	13.7	15.7	17.7	20.2	22.4	24.4	26.4	30.4	33.4
d_s	Max. (Basic size)	3	4	5	6	8	10	12	14	16	18	20	22	24	27	30
	Min.	2.86	3.82	4.82	5.82	7.78	9.78	11.73	13.73	15.73	17.73	19.67	21.67	23.67	26.67	29.67
e	Min.	2.87	3.44	4.58	5.72	6.86	9.15	11.43	13.72	16.00	16.00	19.44	19.44	21.73	21.73	25.15
f	Max.	0.51	0.60	0.60	0.68	1.02	1.02	1.45	1.45	1.45	1.87	2.04	2.04	2.04	2.89	2.89
k	Max. (Basic size)	3	4	5	6	8	10	12	14	16	18	20	22	24	27	30
	Min.	2.86	3.82	4.82	5.70	7.64	9.64	11.57	13.57	15.57	17.57	19.48	21.48	23.48	26.48	29.48
r	Min.	0.1	0.2	0.2	0.25	0.4	0.4	0.6	0.6	0.6	0.6	0.8	0.8	0.8	1	1
s	Nominal designation (Basic size)	2.5	3	4	5	6	8	10	12	14	14	17	17	19	19	22
	Min.	2.52	3.02	4.02	5.02	6.02	8.025	10.025	12.032	14.032	14.032	17.050	17.050	19.065	19.065	22.065
	Max.(14) Column 1	2.580	3.080	4.095	5.140	6.140	8.175	10.175	12.212	14.212	14.212	17.230	17.230	19.275	19.275	22.275
	Max.(14) Column 2	2.560	3.080	4.095	5.095	6.095	8.115	10.115	12.142	14.142	14.142					
t	Min.	1.3	2	2.5	3	4	5	6	7	8	9	10	11	12	13.5	15.5
v	Max.	0.3	0.4	0.5	0.6	0.8	1	1.2	1.4	1.6	1.8	2	2.2	2.4	2.7	3
d_w	Min.	5.07	6.53	8.03	9.38	12.33	15.33	17.23	20.17	23.17	25.87	28.87	31.81	34.81	38.61	43.61
w	Min.	1.15	1.4	1.9	2.3	3.3	4	4.8	5.8	6.8	7.7	8.6	9.5	10.4	12.1	13.1

Notes(14) The column 1 of s (max.) shall apply to cap screws of 8.8 and 10.9 in strength division and those of A 2—50 and A 2—70 in property division. The column 2 shall apply to cap screws of 12.9 in strength division. Provided that the column 1 can apply to those of 12.9 in strength division in accordance with the agreement between the purchaser and the manufacturer. Furthermore, the s (max.) of M 20 and over in nominal designation of screw thread shall apply to all of cap screws strength division and property division.

Notes(15) Cap screws having a nominal designation appended with parentheses shall not be used as far as possible.

Remarks 1. In this case, d_k (max.) shall be the value of * given in this table.
Furthermore, where the cap screws without knurl are required, the orderer shall specify it. Provided that d_k (max.) shall be the value of * given in this table.

2. The nominal length (ℓ) recommendable to the nominal designation of screw thread shall be within the frame of bold lines. Furthermore, the cap screws shorter than the position of dotted line in nominal length ℓ Shall be whole threads and the length of the incomplete thread at the underhead part shall be approx. 3P.

3. the ℓ_g (max.) and ℓ_s (min.) for the cap screw, of which the nominal length (ℓ) is longer than the position of dotted line, shall be in accordance with the following formula：

ℓ_g (max.) = Nominal length (ℓ) − b

ℓ_s (min.) = ℓ_g (max.) − 5P

2. L, ℓs and ℓg of socket head cap screw

Nominal diameter of thread (d)			M3		M4		M5		M6		M8		M10		M12		(M14)		M16		(M18)		M20		(M22)		M24		(M27)		M30	
L			ℓs min and ℓg max																													
Nominal length	min	max	ℓs min	ℓg max	ℓs min	ℓg max	ℓs min	ℓg max	ℓs min	ℓg max	ℓs min	ℓg max	ℓs min	ℓg max	ℓs min	ℓg max	ℓs min	ℓg max	ℓs min	ℓg max	ℓs min	ℓg max	ℓs min	ℓg max	ℓs min	ℓg max	ℓs min	ℓg max	ℓs min	ℓg max	ℓs min	ℓg max
5	4.76	5.24																														
6	5.76	6.24																														
8	7.71	8.29																														
10	9.71	10.29																														
12	11.65	12.35																														
16	15.65	16.35																														
20	19.58	20.42																														
25	24.58	25.42	4.5	7																												
30	29.58	30.42	9.5	12	6.5	10	4	8																								
35	34.5	35.5			11.5	15	9	13	6	11																						
40	39.5	40.5			16.5	20	14	18	11	16	5.75	12																				
45	44.5	45.5					19	23	16	21	10.75	17	5.5	13																		
50	49.5	50.5					24	28	21	26	15.75	22	10.5	18	5.25	14																
55	54.4	55.6							26	31	20.75	27	15.5	23	10.75	19																
60	59.4	60.6							31	36	25.75	32	20.5	28	15.25	24	10	20	6	16												
65	64.4	65.6									30.75	37	25.5	33	20.25	29	15	25	11	21	4.5	17										
70	69.4	70.6									35.75	42	30.5	38	25.25	34	20	30	16	26	9.5	22	5.5	18								
80	79.4	80.6									45.75	52	40.5	48	35.25	44	30	40	26	36	19.5	32	15.5	28	11.5	24						
90	89.3	90.7											50.5	58	45.25	54	40	50	36	46	29.5	42	25.5	38	21.5	34	15	30	9	24		
100	99.3	100.7											60.5	68	55.25	64	50	60	46	56	39.5	52	35.5	48	31.5	44	25	40	19	34	10.5	28
110	109.3	110.7													66.25	74	60	70	56	66	49.5	62	45.5	58	41.5	54	35	50	29	44	20.5	38
120	119.3	120.7													75.25	84	70	80	66	76	59.5	72	55.5	68	51.5	64	45	60	39	54	30.5	48
130	129.2	130.8															80	90	76	86	69.5	82	65.5	78	61.5	74	55	70	49	64	40.5	58
140	139.2	140.8															90	100	86	96	79.5	92	75.5	88	71.5	84	65	80	59	74	50.5	68
150	149.2	150.8																	96	106	89.5	102	85.5	98	81.5	94	75	90	69	84	60.5	78
160	159.2	160.8																	106	116	99.5	112	95.5	108	91.5	104	85	100	79	94	70.5	88
180	179.2	180.8																			119.5	132	115.5	128	111.5	124	105	120	99	114	90.5	108
200	199.05	200.95																					135.5	148	131.5	144	125	140	119	134	110.5	128
220	219.05	220.95																											139	154	130.5	148
240	239.05	240.95																											159	174	150.5	168
260	258.95	261.05																											179	194	170.5	188
280	278.95	281.05																											199	214	190.5	208
300	298.95	301.05																											219	234	210.5	228

Reference：Dimensions of counterboring and bolt hole for the socket head cap screws.

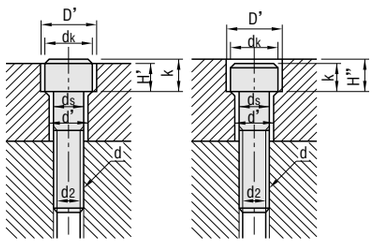

Unit：mm

Nominal diameter of thread (d)	M3	M4	M5	M6	M8	M10	M12	M14	M16	M18	M20	M22	M24	M27	M30
d_s	3	4	5	6	8	10	12	14	16	18	20	22	24	27	30
d'	3.4	4.5	5.5	6.6	9	11	14	16	18	20	22	24	26	30	33
d_k	5.5	7	8.5	10	13	16	18	21	24	27	30	33	36	40	45
D'	6.5	8	9.5	11	14	17.5	20	23	26	29	32	35	39	43	48
k	3	4	5	6	8	10	12	14	16	18	20	22	24	27	30
H'	2.7	3.6	4.6	5.5	7.4	9.2	11	12.8	14.5	16.5	18.5	20.5	22.5	25	28
H"	3.3	4.4	5.4	6.5	8.6	10.8	13	15.2	17.5	19.5	21.5	23.5	25.5	29	32
d_2	2.6	3.4	4.3	5.1	6.9	8.6	10.4	12.2	14.2	15.7	17.7	19.7	21.2	24.2	26.7