Bearings with Housings

Double Bearings, Retained, L Configurable

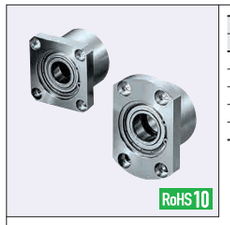

Type			Material		Surface Treatment	Accessory
Round	Square	Compact	Bearing	Housing	Housing	Retaining Ring
BGFRBB	BGFSBB	BGFCBB	Steel	S45C Equivalent	Black Oxide	Spring Steel
BGFRB	BGFSB	BGFCB			Electroless Nickel Plating	SUS304
BAFRB	-	BAFCB		2000series Aluminum Alloy	Clear Anodize	
SBAFRB	-	SBAFCB	* Stainless Steel			
SBGFRB	SBGFSB	SBGFCB		SUS304	-	

* Bearings with Rubber Seals (VV and DD) are all made of steel.

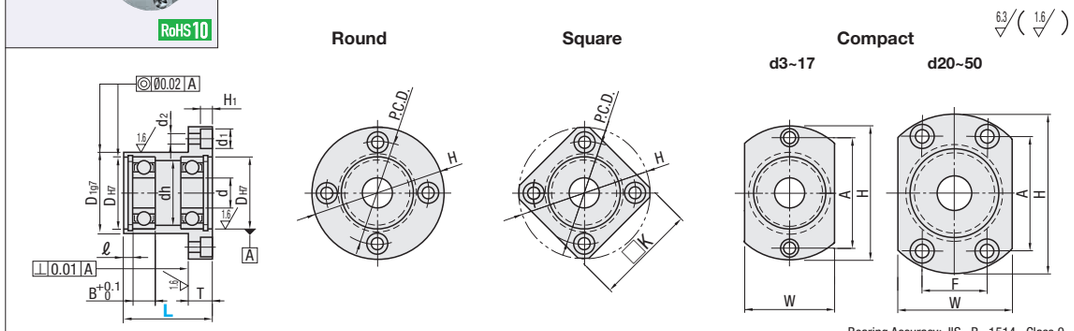

Bearing Accuracy: JIS B 1514 Class 0

Part Number Type	Bearing No.	Seal	L 1mm Increment	d	DH7	Tolerance	B	ℓ	H	W	T	dh	D1g7	Tolerance	P.C.D.	K	A	F	d1	d2	H1
	623			3	10	+0.015 0	4	2.65	33	16	7	7	14	-0.006 -0.024	24	27	24		6.5	3.5	3.1
	624			4	13		5	2.65	35	18		9	17		26	28	26				
	605		20~40	5	14	+0.018 0	5	2.65	36	20		10	18		26	30	26				
	625				16		5	2.65	38	22		12	20		28	31	28				
	606			6	17		6	2.65	39	23		13	21		29	32	29				
	626		25~50		19		6	2.65	41	25		15	24		31	34	31				
	698			8	19		6	2.65	41	25		15	24	-0.007 -0.028	31	34	31				
	608		25~50		22		7	2.65	45	29		18	27		35	36	35				
	628				24		8	2.85	47	32		20	30		37	37	37				
	6800		20~40	10	19	+0.021 0	5	2.65	41	25	8	15	24		31	34	31		8	4.5	4.1
	6900				22		6	2.65	45	29		19	27		35	36	35				
	6000		25~60		26		8	2.85	50	34		22	32	-0.009 -0.034	40	39	40				
(Round)	6200				30		9	2.85	54	38		24	36		44	42	44				
BGFRBB	6801		25~50	12	21		5	2.85	44	29		17	26	-0.007 -0.028	34	35	34				
BGFRB	6901		25~60		24		6	2.85	48	31		21	30		38	38	38				
BAFRB	6001	ZZ Double Shielded			28		8	2.85	52	36		24	34	-0.009 -0.034	42	40	42				
SBAFRB	6201		30~70		32	+0.025 0	10	2.85	56	40		26	38		46	43	46				
SBGFRB	6802		25~60	15	24	+0.021 0	5	2.85	47	32		20	30	-0.007 -0.028	37	37	37				
	6902	*1 *2 VV Non-Contact Sealed Rubber Seal	30~70		28		7	2.85	57	37	10	25	35	-0.009 -0.034	45	45	45		9.5	5.5	5.1
(Square)	6002				32	+0.025 0	9	2.85	60	40		28	38		48	46	48				
BGFSBB	6202		35~70		35		11	3.75	64	44		29	42		52	49	52				
BGFSB	6903			17	30	+0.021 0	7	2.85	60	38		27	36		48	46	48				
SBGFSB	6003	*2DD Contact Sealed Rubber Seal	35~70		35	+0.025 0	10	3.75	66	44		31	42		54	50	54				
	6203				40		12	3.95	72	50		34	48		60	54	60				
(Compact)	6804		35~70	20	32		7	3.75	60	40		28	38		48	46	38	29			
BGFCBB	6904				37		9	3.75	69	47	11	34	45		56	54	51	24	11	6.6	6.1
BGFCB	6004		45~80		42		12	3.95	77	54		36	50		64	59	56	32			
BAFCB	6204				47		14	3.95	81	58		40	54	-0.010 -0.040	68	62	59	34			
SBAFCB	6805		35~70	25	37		7	3.75	69	47		34	45	-0.009 -0.034	56	54	51	24			
SBGFCB	6905				42		9	3.95	77	54		36	50		64	59	56	32			
	6005		45~80		47		12	3.95	88	58	13	41	54	-0.010 -0.040	72	67	63	36	14	9	8.1
	6205				52	+0.030 0	15	4.2	94	64		45	60		78	72	68	39			
	6806		35~70	30	42	+0.025 0	7	3.95	77	54		36	50	-0.009 -0.034	64	59	56	32	11	6.6	6.1
	6906				47		9	3.95	88	58		41	54	-0.010 -0.040	72	67	63	36	14	9	8.1
	6006		45~80		55	+0.030 0	13	4.2	96	66		48	62		80	73	70	40			
	6206		50~120		62		16	4.2	104	74		55	70		88	79	77	44			
	6007			35	62		14	4.2	104	74		55	70		88	79	75	44			
	6207		55~120		72		17	6	126	88	20	64	84	-0.012 -0.047	105	95	92	51	17.5	11	11
	6008		50~120	40	68		15	5.2	114	82	13	60	78	-0.010 -0.040	96	86	80	54	14	9	8.1
	6208		60~120		80		18	6	134	96	20	74	92	-0.012 -0.047	113	102	98	56	17.5	11	11
	6010	ZZ Double Shielded		50	80		16	6	134	96		74	92		113	-	98	56			
	6210		70~120		90	+0.035 0	20	7	147	110		83	106		126	-	104	72			

Check for available sizes in the price list.

*1 No. 623, 624, 605 and 606 are not available for VV (Non-contact Sealed).
*2 Bearings with Rubber Seals are all made of steel.

Ordering Example

Part Number			-	L
Type	Bearing	Seal		
BGFRB	6000	DD	-	25
BAFCB	6901	ZZ	-	52

Bearing No.	Seal	Unit Price												
		Round					Square			Compact				
		BGFRBB	BGFRB	BAFRB	SBAFRB	SBGFRB	BGFSBB	BGFSB	SBGFSB	BGFCBB	BGFCB	BAFCB	SBAFCB	SBGFCB
623					-	-			-				-	-
624					-	-			-				-	-
605					-	-			-				-	-
625					-	-			-				-	-
606														
626														
698														
608														
628														
6800														
6900														
6000														
6200														
6801														
6901														
6001														
6201														
6802														
6902	ZZ (x1.0)													
6002														
6202	VV (x1.1)													
6903														
6003														
6203	DD (x1.1)													
6804														
6904														
6004														
6204														
6805				-	-	-			-			-	-	-
6905				-	-	-			-			-	-	-
6005				-	-	-			-			-	-	-
6205				-	-	-			-			-	-	-
6806				-	-	-			-			-	-	-
6906				-	-	-			-			-	-	-
6006				-	-	-			-			-	-	-
6206				-	-	-			-			-	-	-
6007				-	-	-			-			-	-	-
6207				-	-	-			-			-	-	-
6008				-	-	-			-			-	-	-
6208				-	-	-			-			-	-	-
6010				-	-	-	-	-	-			-	-	-
6210				-	-	-	-	-	-			-	-	-

The price of sealed VV and DD are the price shown in the table multiplied by 1.1.

Example

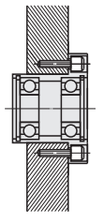

Alterations

Part Number	-	L	-	(NA)
BGFRB6000ZZ	-	25	-	NA

Alteration	Bearings, Retaining Rings Not Assembled
Code	NA
Spec.	Bearings and retaining rings are shipped unassembled to the housing.