Push-Pull Type

Part Number	TC06	Open-Close Angle of Handle	93°
		Mounting Bolt	M5
Body Material	SS400	Fixing Pitch	25.3×14
Surface Treatment	Bright Chromate Plating	Suppress Pressure(N)	490
Unit Price Qty. 1~9	21.02	Tare(g)	70
		Stroke(mm)	13

TC06

Old

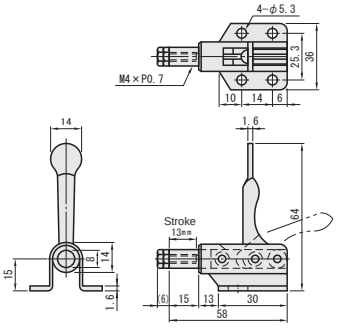

Part Number	TC07	Open-Close Angle of Handle	66°
		Mounting Bolt	M5
Body Material	SS400	Fixing Pitch	28×24
Surface Treatment	Bright Chromate Plating	Suppress Pressure(N)	500
Unit Price Qty. 1~9	21.18	Tare(g)	100
		Stroke(mm)	10

TC07

Old

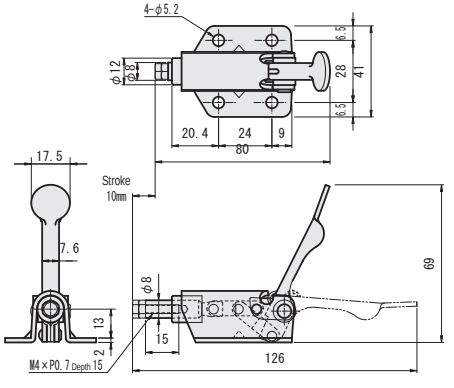

Part Number	TC02	Open-Close Angle of Handle	150°
		Mounting Bolt	M6
Body Material	SS400	Fixing Pitch	34×40
Surface Treatment	Bright Chromate Plating	Suppress Pressure(N)	1960
Unit Price Qty. 1~9	26.15	Tare(g)	370
		Stroke(mm)	30

TC02

Old

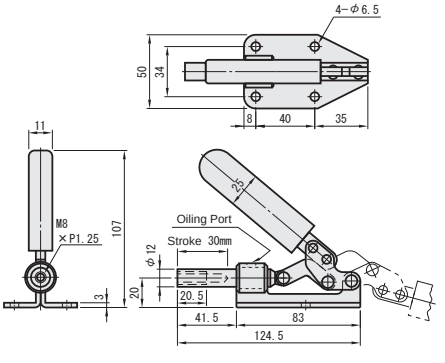

Part Number	MC07-1	Open-Close Angle of Handle	93°
		Mounting Bolt	M5
Body Material	SS400	Fixing Pitch	25.3×14
Surface Treatment	Trivalent Chromate	Suppress Pressure(N)	490
Unit Price Qty. 1~19	16.85	Tare(g)	70
		Stroke(mm)	13.6

MC07-1

RoHS

New

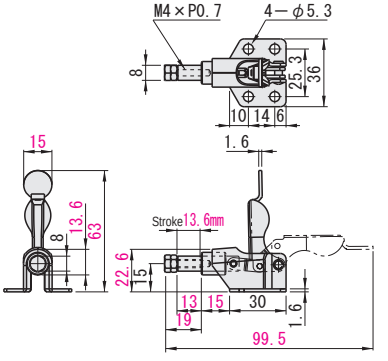

Part Number	MC07-2	Open-Close Angle of Handle	66°
		Mounting Bolt	M5
Body Material	SS400	Fixing Pitch	28×24
Surface Treatment	Trivalent Chromate	Suppress Pressure(N)	500
Unit Price Qty. 1~19	17.01	Tare(g)	100
		Stroke(mm)	10

MC07-2

RoHS

New

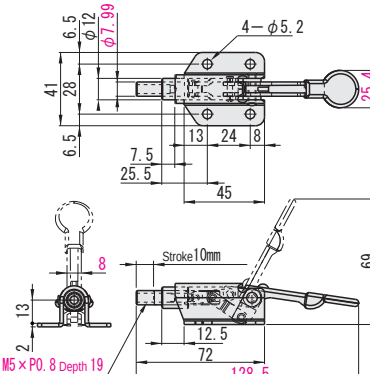

Part Number	MC07-3	Open-Close Angle of Handle	140°
		Mounting Bolt	M6
Body Material	SS400	Fixing Pitch	34×40
Surface Treatment	Trivalent Chromate	Suppress Pressure(N)	1960
Unit Price Qty. 1~19	21.02	Tare(g)	370
		Stroke(mm)	30

MC07-3

RoHS

New

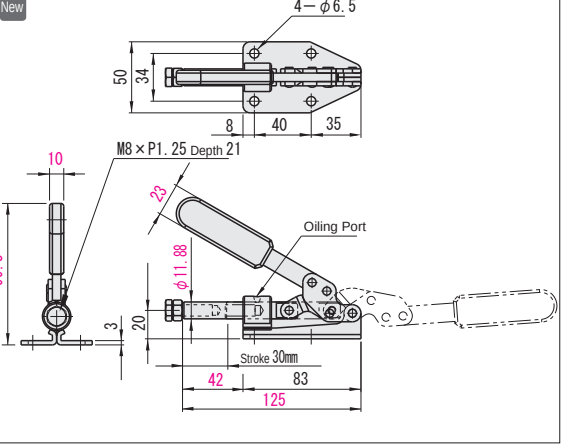

*All prices are in S$