CAD Date Folder Name: 41_Accessories

Aluminum Hinges

RoHS

Aluminum Hinges for Different Extrusion Sizes

STOCK ITEM

PRINTED IN NAVY

HHPSN (Clear Anodize)
HHPBSN (Black Anodize)
HHPSF (For Different Extrusion Sizes: Clear Anodize)

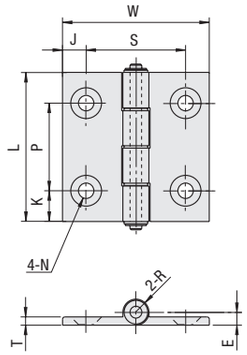

M Materials: A6063S–T5 Bushing: Polyacetal
S Surface Treatment: Anodize

Example

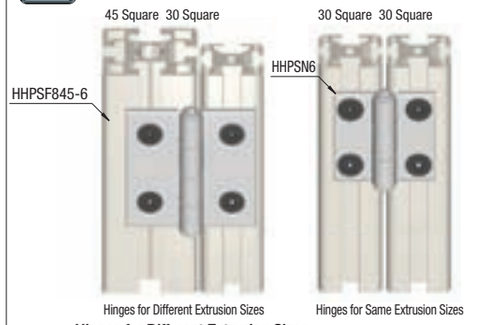

-Hinges for Different Extrusion Sizes

HHPSF 6–5: Attaches HFS5-20mm to HFS6-30mm.
HHPSF8-6: Attaches HFS6-30mm to HFS8-40mm.
HHPSF845-5: Attaches HFS5-30mm to HFS8-45mm.
HHPSF 8–5: Attaches HFS5-20mm to HFS8-40mm
HHPSF 845-6: Attaches HFS6-30mm to HFS8-45mm
When the Hinges are mounted to the panels, etc., use the recommended Hinge Nuts on **P.725**

Part Number Type	No.	*Allowable Load kg	N	Mass g	L	W	K	P	J	S	N Through	N Countersunk	T	E	R	Screws	Quantity	Nuts	Quantity	Clear Anodize Unit Price Qty. 1~8	Clear Anodize Volume Discount Rate 9~	Black Anodize Unit Price Qty. 1~8	Black Anodize Volume Discount Rate 9~
HHPSN HHPBSN (Black Anodize)	5	10	98	22	47	36	11	25	7.5	21	5.5	11	3.5	5	5	Flathead Screw 5-8	4	HNTT5-5	4	164	158	228	219
	6			33		48	8.5	30	8	32	6.5	13		5.5	5.5	Flathead Screw 6-10		HNTT6-6		192	184	258	247
	8			48		62	13	37	10	42						Flathead Screw 6-12		HNTT8-6		205	198	280	268
	8-45	15	147	81	63	80	10	43	16.5	47			4.5			Flathead Screw 6-15				233	223	303	290
HHPSF (For Different Extrusion Sizes)	6-5	10	98	33	47	44.75	8.5	30	10.75	26.5	5.5	11	3.5	5.5	5.5	Flathead Screw 5-8	2	HNTT5-5	2	255	230	-	-
											6.5	13				Flathead Screw 6-10	2	HNTT6-6	2				
	8-5	10	98	48	63	54.25	13	37	15.25	31.5	5.5	11	3.5	5.5	5.5	Flathead Screw 5-8	2	HNTT5-5	2	283	255	-	-
											6.5	13				Flathead Screw 6-10	2	HNTT8-6	2				
	845-5	10	98	81	63	55.5	13	37	14	34	5.5	11	3.5	5.5	5.5	Flathead Screw 5-8	2	HNTT5-5	2	283	255	-	-
											6.5	13				Flathead Screw 6-10	2	HNTT8-6	2				
	8-6	15	147	48	63	62	13	37	12.5	37	6.5	13	3.5	5.5	5.5	Flathead Screw 6-10	2	HNTT6-6	2	228	219	-	-
																Flathead Screw 6-12		HNTT8-6					
	845-6	15	147	48	63	62	13	37	11.5	39	6.5	13	3.5	5.5	5.5	Flathead Screw 6-10	2	HNTT6-6	2	253	243	-	-
																Flathead Screw 6-15		HNTT8-6					

*The allowable load is the value when 2 pieces are used.

Aluminum Hinges Extra Low Head Cap Screw Type

RoHS

HHPSNT

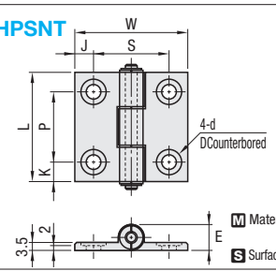

M Material: A6063
Bushing: Polyacetal
S Surface Treatment: Clear Anodize

Example Normal cap bolts are available for installation.

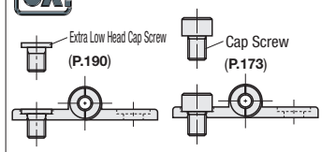

When the Hinges are mounted to the panels, etc., use the recommended Hinge Nuts on **P.725**

Part Number Type	No.	*Allowable Load kg	N	Mass g	L	W	K	P	J	S	d Through	D Counterbore	E	Screws	Quantity	Nuts	Quantity	Unit Price Qty. 1~8	Volume discount Rate 9~
HHPSNT	5	10	98	22	47	36	11	25	7.5	21	5.5	10	5	CBSA5-6	4	HNTT5-5	4	173	155
	6			34		48	8.5	30	8	32	6.5	11	5.5	CBSA6-8		HNTT6-6		201	178
	8			49	63	62	13	37	10	42				CBSA6-10		HNTT8-6		219	196

*The allowable load is the value when 2 pieces are used.

Order Example

Part Number
HHPSN6

Delivery 1 Day / 5 Days P.87

Alterations

Part Number	-	(SET / SST)
HHPSN6	-	SET

Alterations	Code	Spec.	Hinges	No.		Price Adder SET	Price Adder SST
Applicable Screw Nut Set	SET SST (Stainless Steel)	Applicable screws and nuts come in a set. When SST is specified, stainless steel screw and nut are included. (- When SET is specified, the material of the Flathead Screws is SCM435 and their surface treatment is Blackening.)	HHPSN HHPBSN	5		82	107
				6		88	132
				8	8-45	102	146
			HHPSNT	5		324	-
				6		354	-
				8		363	-
			HHPSF	6-5	845-5	95	119
				8-5	8-6		
				845-6			

CAD Date Folder Name: 41_Accessories

Aluminum Hinges with Tabs

RoHS

HHPSDT

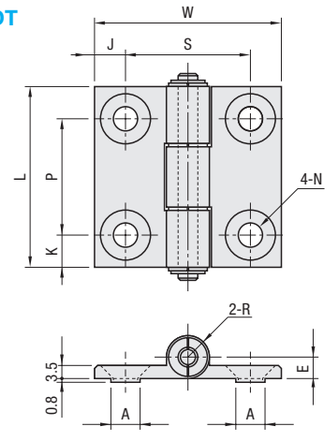

M Material: A6063 Bushing: Polyacetal
S Surface Treatment: Clear Anodize

Example

The protrusion prevents misalignment when attached. Therefore, it can be easily mounted.

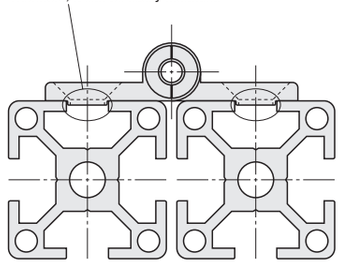

When the Hinges are mounted to the panels, etc., use the recommended Hinge Nuts on **P.725**

Part Number Type	No.	*Allowable Load kg	N	Mass g	L	W	K	P	J	S	N Through	N Countersunk	E	A	R	Screws	Quantity	Nuts	Quantity	Unit Price Qty. 1~8	Volume Discount Rate 9~
HHPSDT	5	10	98	23	47	36	11	25	7.5	21	5.5	11	5	5.5	5	Flathead Screw 5-8	4	HNTT5-5	4	182	164
	6			35		48	8.5	30	8	32	6.5	13	5.5	7.5	5.5	Flathead Screw 6-10		HNTT6-6		205	185
	8			51	63	62	13	37	10	42				9.5		Flathead Screw 6-12		HNTT8-6		223	201

* The allowable load is the value when 2 pieces are used.

Aluminum Hinges with Slotted Holes

RoHS

HHPSNA

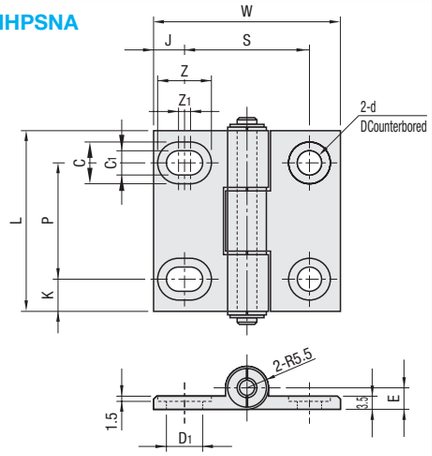

M Material: A6063 Bushing: Polyacetal
S Surface Treatment: Clear Anodize

Example

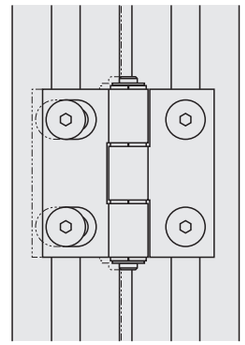

Slotted mounting holes make it possible to adjust right and left positions.

When the Hinges are mounted to the panels, etc., use the recommended Hinge Nuts on **P.725**

Part Number Type	No.	*Allowable Load kg	N	Mass g	L	W	K	P	J	S	d Through	D Counterbore	D1	C	C1	Z	Z1	E	Screws	Quantity	Nuts	Quantity	Unit Price Qty. 1~8	Volume Discount Rate 9~
HHPSNA	5	10	98	22	47	36	11	25	7.5	21	5.5	10	7	10	5.5	11.5	1.5	5	CBSA5-6	4	HNTT5-5	4	182	164
	6			32		48	8.5	30	8	32	6.5	11	9.5	11	6.5	14	3	5.5	CBSA6-8		HNTT6-6		205	185
	8			47	63	62	13	37	10	42			11.5			16	5		CBSA6-10		HNTT8-6		223	201

*The allowable load is the value when 2 pieces are used.

Order Example

Part Number
HHPSDT6
HHPSNA6

Delivery 5 Days P.87

Alterations

Part Number	-	(SET / SST)
HHPSDT6	-	SST

Alterations	Code	Spec.	Hinges	No.	Price Adder SET	Price Adder SST
Applicable Screw Nut Set	SET SST (Stainless Steel)	Applicable screws and nuts come in a set. When SST is specified, stainless steel screw and nut are included. HHPSNA is available for -SET only. (- When SET is specified, the material of the Flathead Screws is SCM435 and their surface treatment is Blackening.)	HHPSDT	5	82	107
				6	88	132
				8	102	146
			HHPSNA	5	324	-
				6	354	-
				8	363	-

MiSUMi FA 2010 ขอราคาและสั่งซื้อได้เร็วที่สุด! ด้วย Web Ordering System Misumi WOS Search http://th.misumi-ec.com